Technical Description

FX Arm - Duct Options

2” and 3”

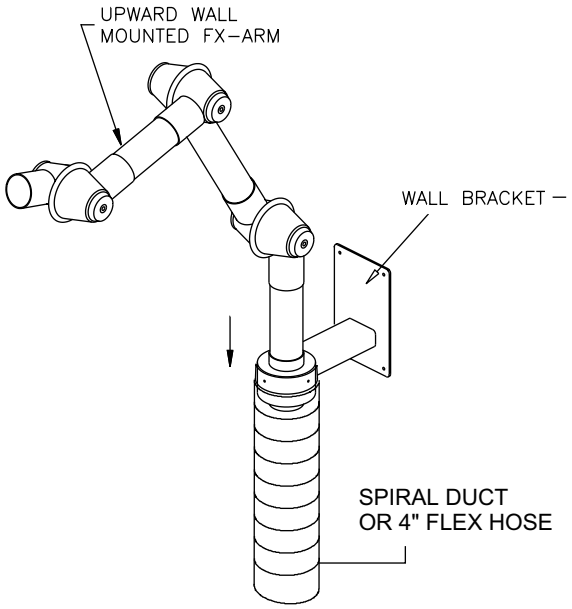

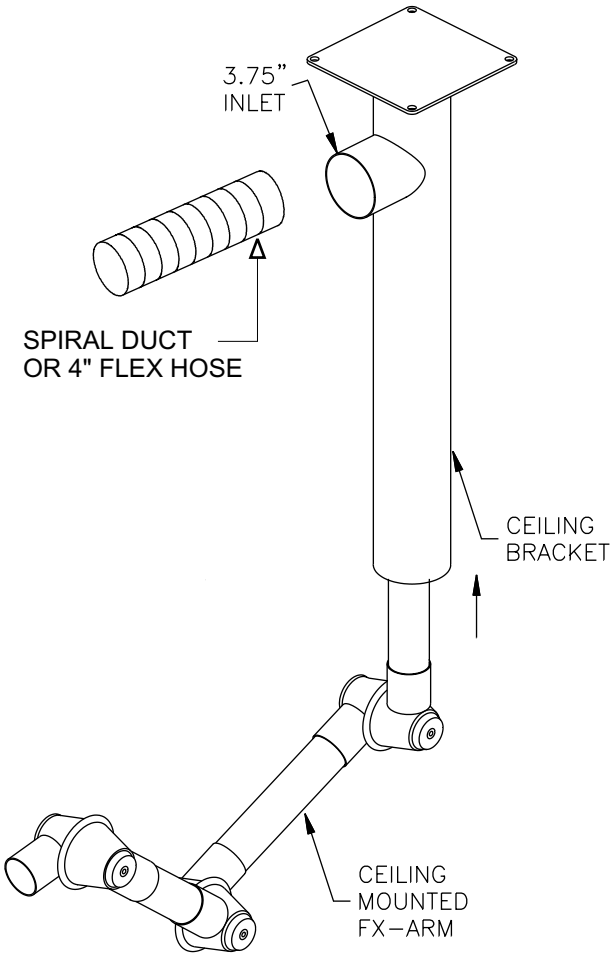

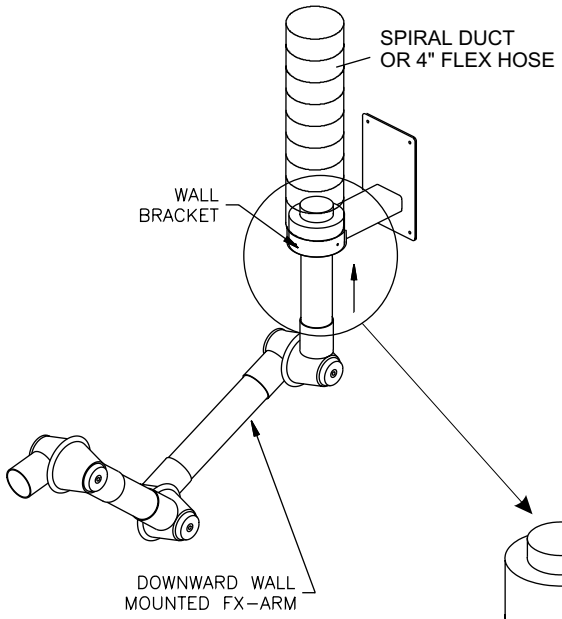

***DUCTWORK OR FLEXIBLE HOSE WILL ALWAYS RUN FLUSH WITH FX MOUNTING BRACKET (NOT THE SWIVEL OF THE EXTRACTION ARM)**

***ALL MINIARMS FX REQUIRE A 4" CONNECTION FOR DUCTWORK. MOUNTING DUCTWORK TO THE 2" OR 3" SMALL FLANGE AT THE BASE OF THE ARM WILL CAUSE THE EXTRACTION ARM TO LOSE THE 360 DEGREE SWIVEL**

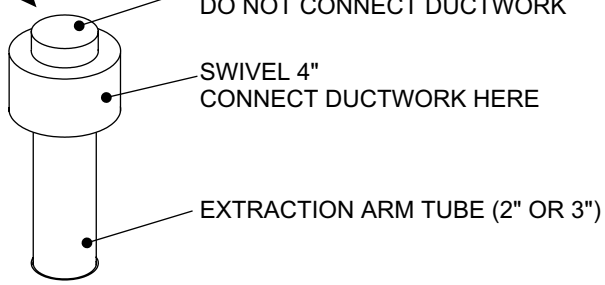

Copyright © 2002 Nederman Inc. All rights reserved.